PRODUCT SHEET

Description:
Assembla Screw, CSK, PZD, ø7,0 x 50mm, Steel BZP, W/Hole For Cover Cap

Item number:
12.17.050-2

Units	Box	Carton	HS Code	Barcode
Pcs.	1	2000	7318149199	5704866030366

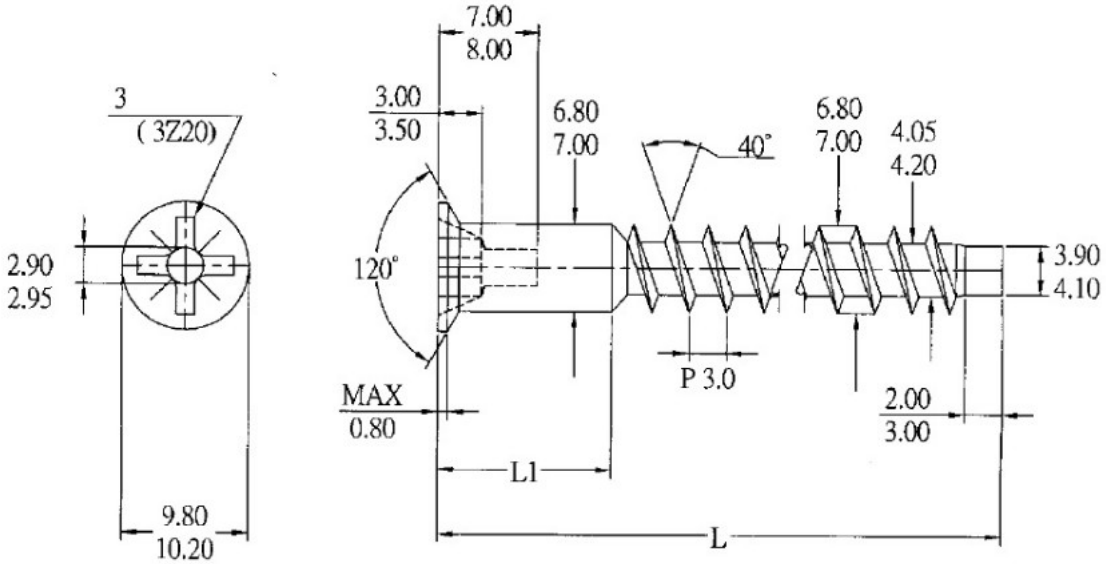

SISO A/S
Mileparken 11
DK-2740 Skovlunde
Denmark
VAT: 24786013

Phone +45 45 830 900

www.siso.dk
siso@siso.dk

Danske Bank
Nytorv Branch
Copenhagen
SWIFT: DABADKKK

Account no.
4180 3112 112936
IBAN Account
DK7230003112112936